SEQUENTIAL HIGH-VOLUME SAMPLER CAV-A/MSb

- MASS FLOW CONTROL –

AUTOVÍA A- II, KM.575 - 08293 COLLBATÓ – BARCELONA - T.93 777 05 00 / F.93 777 05 50- www.mcvsa.com

SEQUENTIAL HIGH-VOLUME SAMPLER

CAV-A/MSb

USER AND TECHNICAL MANUAL

Version 1.01

This manual must be carefully read before making any attempt to switch the equipment on. If you have any doubts, please contact your supplier or the MCV, S.A. Technical Service Department directly on the pone +34 93 777 0500, by FAX on +34 93 777 0550 or by E-mail to the following address **sat@mcvsa.com**

September 2008

GUARANTEE

MCV, S.A. guarantees the operation of the assembly of materials that make up the delivered equipment against any manufacturing defect, for a period of one year.

All defects or faults, produced by incorrect use, impacts, over-voltages, incorrect power suppliers, lightning strikes to the network or data transmissions lines or handling and/or intervention by personal not authorized by MCV are excluded from this guarantee.

Periodic equipment calibration, preventive maintenance operations and the replacing of parts due to normal wear are not covered by this guarantee.

The application of this guarantee is subject to correct equipment installation and operation, together with correct maintenance in accordance with the contents of this manual.

This guarantee includes both the materials and labour that are required to repair the equipment, with the customer being responsible for any costs involved in the moving or transport of the equipment.

NOTE

MCV S.A. reserves the right to incorporate all modifications it thinks fit in order to improve the performance of the Sampler without any prior warning.

REVISION HISTORY

MANUAL

Date	Version	Description
September 2008	1.01	It is the first version. It describes the software version V 1.10 functionalities.

SOFTWARE

Date	Version	Description
September 2008	1.10	It is the first version of the CAV-A/Mb Sampler.

1. INTRODUCTION

The purpose of this manual is to help the user become familiar with installing the Sampler, setting up, using and maintaining it. It is strongly recommended to read this manual before installing or using the Sampler.

The Sequential High-Volume Sampler with Mass Flow Control and a capacity for 15 filters of 15 cm of diameter, has the main application in the determination of suspended particles, a normal parameter in atmospheric quality studies in locations that require little maintenance.

The Sampler incorporates a new motor container which considerably reduces the noise.

The Sampler main features are:

- Capacity for 15 filters of 15 cm of diameter.
- Low noise level (less than 40dB at $30m^3/h$)
- Wide operating range without equipment recalibration being necessary
- No recalibration needed depending on the site
- True or standardized flow rate control
- Working cycle between an hour and a week, which can be easily set by user
- Operating cycle duration configured by user, between clock hours and motor hours
- Enhanced sampling rate stability (better than 1.5%)
- Warning SMS messages

The CAV-A/MSb Sampler meets the specific requirements for particulate matter sensors contained in the **UNE-EN 12341** and **UNE-EN 14907**.

For flow measurement, the equipment follows the recommendations of the **UNE-EN 5167**.

The unit is supplied in a recyclable wood package, which complies with International Plant Health Protection Regulations set out in document **ISPM 15**.

2. SAMPLER DESCRIPTION

The high-volume Sampler CAV-A/M'S is a suspended particle Sampler which is used to study atmospheric contaminants. The sample is collected in a suitable filter in which the gravimetric and/or chemical evaluation of the retained particles is performed.

The unit is built into a case made of weatherproof material and easy to transport so that the Sampler is able to operate without an extra environmental protection. The suction pump is powerful enough to work over a wide flow rate range and without any maintenance.

The Sampler includes an automatic electronic control that keeps the settled airflow independently of the clogging level in the sampling filter, mains variations and pressure and ambient temperature variations.

NOTE: the airflow can be constant and the same as the airflow programmed whenever dogging is not excessive, and also depending on the filter's material. In general, there is not any problem when using flow rates of $30m^3/h$, 24 hours sampling duration and GF/A or QMA Whatman filter. Contact to MCV,S.A., to use another kind of filters.

Airflow measurement is made by means of a calibrated orifice, three pressure sensors and two temperature sensors. The pressure sensors are used to determine the pressure fall in the calibrated orifice, the absolute pressure at the orifice entrance and the ambient absolute pressure. The temperature sensors are used to measure the sample temperature and the temperature inside the Sampler in order to carry out corrections if these are necessary. The Sampler temperature sensor is set in the diaphragm, after the sampling filter.

All values and parameters for operation, sampling and calibration are displayed in the large LCD screen, along with the most important data items, such as current flow rate and total accumulated volume, which are displayed using large characters.

The four keys on the unit's front control panel are used to execute all operations of Sampler usage, configuration and calibration.

The Sampler includes a battery in order to operate in case of power failure. However, if the Sampler is running on battery, it can not sample. The Sampler has

a board that includes the power supply, the battery charge control and the power electronics of the motor filter change system. Another two boards, fixed to the equipment frontal, include all the digital electronic system, the display and the keypad.

Filter changing system is composed by a motor charger, a side motor and a filter motor. The first one prepares the suitable filter holder so the side motor places it laterally to the filter motor, which will put the filter holder in operation position.

3. TECHNICAL SPECIFICATIONS

3.1. DIMENSIONS AND WEIGHTS

The Sampler's dimensions and weight (without the filter holder head) are as follows:

Width	84 cm.
Depth	60 cm.
Height	112 cm.
Weight	62 Kg

The equipment is supplied in a recyclable wooden box measuring 89x65x117 cm which has a weight of 31 Kg. This package meets the International Plant Health Protection Regulations set out in document **ISPM 15**.

3.2. ELECTRICAL SPECIFICATIONS

Power supply input	230Vac single-phase
Maximum power	1000 VA
Circuit breaker	Bipolar, 6A
Internal fuses 230Vac (F1 and F2)	5x20, fast, 5A
Internal fuses 12Vcc (F3 and F4)	5x20, fast, 3A and 2A

3.3. OPERATIONAL SPECIFICATIONS

Filter capacity	Maximum 15 filter of 15 cm
Flow rate range	Configurable from 15 to 45 m^3/h
Flow rate programmer resolution	0,5 m^3/h
Flow rate control	True or normalized (configurable)
Internal flow rate measurement resolution	0,01 m^3/h
Expanded uncertainty	<2% (2)
Normalization pressure	1013 mB
Normalization temperature	Configurable from 0 to 25 °C
Cycle duration	Configurable from 1 to 168 hours
Initial start-up delay	Configurable up to 7 days
Operating intervals	Configurable from 30 minutes to 96 h.
Battery duration (at full charge)	More than 24 hours(1)
Battery recharge time	Less than 72 hours (1)

(1) The battery is incorporated so that the Sampler can be configured (no sampling) without any extra power supply; no data is lost if the equipment runs out of battery. The Sampler can sample without a battery or when it is flat, if it is connected to 230 Vac.

(2) Laboratory conditions.

4. INSTALLATION AND SET UP

The installation of the CAV-A/M Sampler does not require any special form of conditioning, only a mains socket providing 230 Vac with a minimum power of 1100 W.

The Sampler box is made of polyester fiber, which is able to withstand the environmental conditions found throughout Spain during all seasons of the year.

When working in areas with strong winds, it is recommended to suitably hold the Sampler by some means to prevent it from being blown over. Normally, the feet are fixed to the ground using plastic or metal clamps. If the ground is soil, then the Sampler can be positioned on the top of a concrete slab measuring (70x60x10 cm). In order to assure the good changing filter system operation, it is important to place the Sampler in a flat area.

If the Sampler has to be installed inside a building, MCV,S.A. can supply additional tube to connect the Sampler and the holder filter, both rigid and flexible material.

It is recommended to install the Sampler output tube, which is supplied with the unit. This tube reduces noise to a certain extent and prevents possible feedback of air from Sampler air outlet to the filter holder inlet. A stainless steel clamp is supplied with the three-meter exhaust hose for holding this same hose to the air outlet dome on the Sampler.

Regarding the installation conditions (sampling height, distance to nearby disturbing accidents, etc), the rules recommended by the various competent national and international organizations should be followed.

The Sampler is supplied with a three-meter long electric mains cable (however, it can be optionally supplied with other lengths), which must be connected to the equipment and to 230-V single-phase mains socket with ground connection. It is highly recommended to check this point carefully because one of the most common causes of failure is connecting it to 380 Vac. This mains socket must be suitable protected against inclement weather.

Once the equipment has been connected to the mains supply, the breaker should be reset and the Sampler's ON/OFF switch set to ON. Now, the Sampler is ready for use. However, before performing any sampling, make sure that the Sampler's

configurable parameters agree with your requirements (see the following section on how to configure the sampling parameters for the Sampler).

5. USING THE SAMPLER

5.1. KEYPAD DESCRIPTION

The keypad is used to access all the Sampler functions, all the sampling parameters, the operating cycle configuration and the Sampler calibration parameters. This keypad consists of the following four keys: ↑, ↓, ↵ and ←.

The first two keys ↑ and ↓, are used to move up and down through the menus with this possibility, or to vary the value at the moment being programmed. The ↵ key is used to select the desired option or to validate the entry made with ↑ and ↓. The ← key is used to move to the previous menu or to exit the programming of the current value, but without validating the values, recovering the original value. When displaying a screen with selection options or where values can be configured, the selected option or values will be displayed in **REVERSE VIDEO**.

5.2. SAMPLER MENUS

The descriptions of Sampler screens or options provided below correspond to the current program version, V1.10. Therefore, there may be some small differences between the description given and what is actually seen on the Sampler screen when using a different program version.

5.2.1. Main menu

With this screen and the associated keys, all the Sampler's functions and options can be accessed.

5.2.2. Operating

Every time the Sampler is switched on the operation screen is displayed. This screen shows the current date and time, the instantaneous flow rate value, the present filter, the accumulated volume in the current cycle or last cycle performed, the selected flow rate, the total number of cubic meters sampled, together with the status of the equipment and the power supply. The installed version in the Sampler can also be seen. The Flow Rate and Volume parameters are displayed with a large character set so that they are more legible. The corresponding units are shown next

to these parameters and also the Programmed Flow Rate and Accumulated figure; here an **"N"** will be displayed or not, depending on whether the unit is working with normalized flow rate or real.

The possible Sampler states are listed below:

- **Cycle COMPLETED**: the Sampler indicates that the cycle has been completed.

- **SAMPLE**: the Sampler is sampling air.

- **AUTO ZERO**: the Sampler is performing an automatic zeroing of the differential pressure sensors. This state lasts approximately 20 seconds and is repeated at a maximum rate of once per hour, and at minimum of once every six hours.

- **MAINS Failure**: the Sampler should be sampling, but there is no mains power.

- **POSITION PLACING**: The Sampler is placing the holder filter in the suitable position.

- **In STANDBY**: a deferred start-up has been programmed, and the motor should not be running at this time.

- **FLOW RATE Alarm**: the Sampler has detected a flow rate of less than 10 m^3/h over ten consecutive seconds and has shutdown the blower to protect it.

- **System Alarm**: the Sampler has detected a system error.

With respect to the power supply message, the two possibilities are:

- **Correct**: the Sampler detects correct power supply levels.
- **MAINS FAILURE**: the Sampler detects no mains power.

Due to the fact that no parameters can be modified on this screen nor are there any selectable options, the ↑, ↓, ↵ keys do not have any function and only the ← key can be used to move to the main menu.

5.2.3. **Summary Filters**

This screen is used to display the current values of the sampled filters. The displayed values are:

- Start sampling date and time.
- Real and normalized volumes of the filter.
- Temperature and average pressure of time the filter has been sampled.
- Filter time and power failure for this filter.

It is only possible to display information from three filter together; if there were more filters, this information can be displayed with the ↑ and ↓.

5.2.4. **Printing summary**

This option is a complement of the previous screen; it allows the printing of the sampled filter information.

5.2.5. **Sampler configuration**

This screen is used to display and modify the most frequently employed Sampler parameters, together with the sampling cycle. The configurable parameters are:

- **Operating Flow Rate (m^3/h)**: the flow rate at which the Sampler aspirates in the sample. This value will be changed by 0,5m^3/h using the ↑ or ↓ keys. The displayed value will change faster if one of the keys is maintained pressed. Pressing ↵ will confirm the new value, or the ← can be used to leave the previous value unchanged.

- **Control by Flow Rate:** this is used to select whether the Sampler is going to regulate the previously selected flow rate, by means of the **Normalized** or **Real** value.

- **Cycle Duration (h)**: allows the sampling cycle duration to be varied between 1 and 168.

- **Filter Hours**: it allows to select if the cycle hours, configured in **Cycle Duration**, are **Motor** or **Clock** hours. If **Clock** is selected, the cycle will fnish after the number of hours that the user has configured on the Sampler's clock. This option is useful when the sampling is to be carried out in natural days or periods. If the Sampler is set in operation at 08:00, with a program length of 24 hours, then the cycle will be completed at 08:00 the following day. However, if mains failures occurred during this time, the total number of cubic meters will be less than those expected.
  If, on the other hand, **Motor** is selected, this means that the Sampler is to perform complete samples, with the motor hours indicated in **Cycle Duration**. If there are any power failures in this case, the cycle will not be completed within the expected number of hours, but instead, the period of time will be extended by the amount of time during which there was no mains power. This method has the advantage of always producing samples with the desired cubic meters, but if there are mains failures, the exact period during which the Sampler was operating will be unknown.

- **Normalization Temperature (°C)**: this allows the selection of the temperature that is to be employed in calculating the normalized flow rates and volume. It can be set from 0 to 25°C in one-degree steps. The preselected value is **0°C**.

- **Date**: enables the Sampler's current date to be modified. This parameter, together with **Time**, is essential if the Sampler is to be employed with **Deferred Start-up** (see point 5.2.8)

- **Time**: used to adjust the Sampler time.

- **RS rate (bauds)**: it is used to select the serial communications (RS-232V) rate. It is possible to choose between **2400**, **4800, 9600** and **19200** bauds. It is for Technical Service use.

- **Language**: it allows choosing the language. In this version, it is possible to choose between Spanish (**ES**) or English (**EN**).

- **Active Screen (min):** It allows selecting how much time the display will be lighted, since the last key-press. It can be configured from 5 to 240 minutes.

5.2.6. **Cycle Configuration**

On this screecn, the number of filters prepared for sampling can be configured as well as if it desired that the Sampler starts at a specific day and date, and then, if a discontinuous sampling is desired (the motor will be working for a certain period of time, and then stopped for another period of time). In order to be sure that the sampling will be carried out during the expected period, it is very important to check that the date and time displayed by the equipment are correct. Once the values for the start date, start time, running time and stop time have all been programmed, the sampling operation is started by selecting the option **Deferred Start-up**. The options displayed on this screen are as follows:

- **Charged filters**: filter holder prepared and charged on the equipment. The sampling cycle will finish after sampling the number of filters indicated in this option.

- **Automatic printing:** it shows if the information will be printed at the end of every sampling.

- **First filter**: it shows the filter which the Sampler will start with.

- **Start day**: this indicates how many days must pass before the equipment starts sampling. This value can be configured between **+0** and **+7**. +0 indicates that sampling will start today; +1 will start tomorrow, etc.

- **Start hour/minute:** indicates the hour and minute when the sampling has to start.

- **RUNNING time (HH:MM)**: indicates how long the motor will be in operation once the sampling operation has started.

- **Stop time (HH:MM)**: indicates, once the running time has elapsed, how long the motor is going to be off.

These last two options are used to make discontinuous sampling operations and can be selected in fractions of 30 minutes, from 30 minutes up to 96 hours. If only one sampling is to be carried out with deferred start-up then it is very important to leave **Running time** and **Stop time** configured with **--:--**.

5.2.6.1. **Examples of deferred start-up and continuous sampling**

Configured data:

Current date and time	31/12/00 09:05
Cycle duration	24 hours
Filter hours	Clock
Start day	+1
Start hour/minute	08:00
Running time	--:--
Stop time	--:--

The cycle will start on the 01/01/01 at 08:00 and will finish on 02/01/01 at 08:00.

Configured data:

Current date and time	31/12/00 09:05
Filter duration	24 hours
Cycle hours	Clock
Start day	+2
Start hour/minute	00:00
Running time	--:--
Stop time	--:--

The cycle will start on the 02/01/01 at 00:00 and will finish on the 03/01/01 at 00:00.

Configured data:

Current date and time	31/12/00 09:05
Filter duration	24 hours
Filter hours	Clock
Start day	+0
Start hour/minute	08:00
Running time	--:--
Stop time	--:--

The cycle will start immediately and will finish on the 01/01/01 at 09:05.

Configured data:

Current date and time	31/12/00 09:05
Filter duration	24 hours
Filter hours	Clock
Start day	+0
Start hour/minute	10:00
Running time	--:--
Stop time	--:--

The cycle will start on the 31/12/00 at 10:00 and will finish on the 01/01/01 at 10:00.

If in all these examples the **Cycle hours** were **Motor hours,** the cycle behavior would be the same, except that there was any mains power failure, in which case the cycle would end later.

5.2.6.2. **Examples of deferred start-up and discontinuous sampling**

Configured data:

Current date and time	31/12/00 09:05
Filter duration	24 hours
Filter hours	Clock
Start Day	+1
Start hour/minute	10:00
Running time	06:00
Stop time	06:00

The cycle starts on 01/01/01 at 10:00 and finishes on 02/01/01 at 10:00. The sampling intervals are:

From 01/01/01 10:00 to 01/01/01 16:006 hours sampling
From 01/01/01 16:00 to 01/01/01 22:006 hours inactive
From 01/01/01 22:00 to 02/01/00 04:006 hours sampling
From 02/01/01 04:00 to 02/01/01 10:006 hours inactive

Configured data:

Current date and time	31/12/00 09:05
Cycle duration	24 hours
Filter hours	Motor
Start day	+1
Start hour/minute	10:00
Running time	06:00
Stop time	06:00

The cycle starts on 01/01/01 at 10:00 and finishes on 03/01/01 at 10:00 (assuming that there are no mains power failures). The sampling intervals are:

From 01/01/01 10:00 to 01/01/01 16:006 hours sampling
From 01/01/01 16:00 to 01/01/01 22:006 hours inactive
From 01/01/01 22:00 to 02/01/00 04:006 hours sampling
From 02/01/01 04:00 to 02/01/01 10:006 hours inactive
From 02/01/01 10:00 to 02/01/01 16:006 hours sampling
From 02/01/01 16:00 to 02/01/01 22:006 hours inactive
From 02/01/01 22:00 to 03/01/00 04:006 hours sampling
03/01/01 04:00 end of cycle (24 hours of motor running have elapsed)

Configured data:

Current date and time	31/12/00 09:05
Filter duration	24 hours
Filter hours	Clock
Start day	+0
Start hour/minute	00:00
Running time	06:00
Stop time	03:00

The cycle starts immediately and finishes on 01/01/01 at 09:05. The sampling intervals are:

From 31/12/00 09:05 to 31/12/00 15:056 hours sampling
From 31/12/00 15:05 to 31/12/00 18:053 hours inactive
From 31/12/00 18:05 to 01/01/01 00:056 hours sampling
From 01/01/01 00:05 to 01/01/01 03:053 hours inactive
From 01/01/01 03:05 to 01/01/01 09:056 hours sampling

5.2.7. **Sampler Supervision**

This screen provides all the available data for the sampling cycle that is currently executing or has been completed, together with some equipment control parameters. Because of the large amount of data displayed on this screen, its use is not recommended for normal operation because it is mainly intended to be used by the maintenance engineers. The following data are displayed:

- **Instantaneous Flow Rate (T/N)**: the current instantaneous flow rate, first the true one then the normalized one.

- **Average Flow Rate (T/N):** the true and normalized average flow rate for the current or completed cycle. This flow rate is calculated taking into account the total volume and cycle time. This value is deleted when a new cycle is commenced.

- **Programmed Flow Rate**: operating flow rate (selected by the user).

- **Volume (T/N)**: true and normalized volumes for the current or finished filter. This value is deleted when a new cycle is commenced.

- **Filter time**: indicates the total time of sampling of the present (see the more complete description in “Sampler Configuration Screen”). This value is deleted when a new cycle is started.

- **Time w/o MAINS**: indicates the amount of time that the Sampler has been without any mains supply during the current or completed cycle (see the more complete description in “Sampler Configuration Screen”). This value is deleted when a new cycle is commenced.

- **Accumulated (T)**: the total number of true cubic meters sampled by the equipment.

- **Accumulated (N)**: the total number of normalized cubic meters sampled by the equipment.

- **Sample temperature**: the current temperature in the sampling tube. This is used to calculate the normalized flow rate.

- **Auxiliary temperature**: the current temperature on the Sampler's electronic control board. It is used to adjust the possible temperature drift on the pressure sensors. It must be taken into account that this temperature reading is taken inside the equipment and can therefore be substantially different to the sample temperature. It is also used to automatically adjust the contrast of the display screen.

- **Atmospheric pressure**: the static pressure inside/outside the Sampler.

- **Motor power**: instantaneous power (in %) supplied to the motor. When the sampling of the filter is finished, this value is kept until the start of the following one. It is an approximate value with a 1% resolution.

- **Motor hours**: it shows how many hours the motor has worked.

5.2.8. **Maintenance**

This menu lets us enter to another menus and equipment options, which are described below:

5.2.8.1. **Calibration**

By using the options on this screen, the Sampler can be calibrated by modifying each of the equipment's calibration constants. It is recommended that only qualified technical personnel access calibration parameters. In order to prevent accidental modifications of one or more of these calibration parameters, access to these values is protected by an **access code**. This code is **123** and it is entered by selection of the **Access Code** option, the ↑ or ↓ keys are used to enter **123**, then it is confirmed with ↵. From this point of time, as long as the calibration screen is not exited, total access is available to all Sampler's calibration parameters. After a ***correct calibration***, all the calibration constants, with the exception of ***K Diaphragm***, must be very close to ***1.000***.

The constants that can be modified are described below:

- **K Tm / Ta**: these are the calibration constants for temperature. **Tm** refers to the sensor that measures the sample temperature and which is located

inside the Sampler suction pipe. **Ta** refers to the auxiliary temperature sensor that is located on the control board.
To calibrate the analogue control board inputs corresponding to these temperatures, it is first necessary to disconnect the two sensors from the control board, connect a **0ºC** temperature simulator for both sensors, and then select and confirm the **Minimum Temp** option. Then a **40,8ºC** temperature simulator must be connected at each input, the order is not important, with the corresponding **K** being adjusted until the consigned value at the simulator on the line **Tm/Ta (ºC).** With this accomplished, the analogue sensors are then adjusted.
The temperature sensors are calibrated in the factory and do not require any further adjustment.

- **K P1 / P2 / P3**: these refer to the three pressure calibration constants**. P1** is the differential pressure sensor that measures the pressure drop on the sides of the calibrated orifice (diaphragm). **P2** is also a differential detector that measures the difference between atmospheric pressure and the inlet of the diaphragm. **P3** is an absolute pressure sensor that measures atmospheric pressure. All values are displayed in **mbar.** The procedures to be followed for P1 and P2 are identical. After **connecting the unit to 230 Vac**, a prudent period of time should be allowed for thermal stabilization of the electronics (about ten minutes), and then the calibration screen should be accessed. At this moment, the P1 and P2 pressure zeros are established. Now the PVC tubes to P1 must be disconnected and then subjected to a pressure of differential of 100mbar and the corresponding K adjusted until a P1 of 100 mbar is displayed. This process has to be repeated for P2. To calibrate P3, the third constant should be selected and adjusted until the actual atmospheric pressure is displayed. A reliable pressure standard must be employed.

Warning: care must be taken when disconnecting the PVC tubes from the sensors because their entry ports are very delicate and easily broken. Care must also be taken with the port on each sensor to which the PVC tubes are connected in order to replace them in the same way.

NOTE: when the Sampler is connected to 230 Vac and while the blower is not running, a continuous ***automatic-reset*** is performed for the P1 and P2

differential sensors. This function is disabled when entering to the calibration screen. This is necessary because, otherwise, when pressure is applied to P1 and P2, zero values would follow the actual reading from these sensors meaning they could never be calibrated. Due to this automatic-reset disabling function, if the calibration screen is left active after starting up a sampling cycle in normal Sampler operation, the Sampler is blocked on the first automatic-reset attempt because this function is still disabled. To prevent this from happening, the Sampler will automatically exit the calibration screen after the **Active Screen** time has elapsed.

- **K Diaphragm**: it must be adjusted for correct flow rate measurement. The Sampler should be programmed at ***40m^3/h***, ***Normal*** flow rate and normalization ***temperature*** to the corresponding value according to the flow rate meter to be used as reference. An immediate start-up should be performed and the flow rate meter left a prudent time until the instantaneous flow rate is completely stable and the measured flow rate coincides with the programmed value. Then select the calibration screen and adjust the K Diaphragm so that the instantaneous flow rate displayed on this screen fits with the selected value.

  NOTE: to calibrate the equipment flow measurement, the equipment is used to as a flow generator. This means that the continuous flow regulation to obtain the target value can cause instability in reading it. To minimize this effect and have a lower **Uncertainty** it is recommended to have the calibration equipment powered by an UPS to prevent network fluctuations; these fluctuations cause a flow instability, which would add to the equipment flow measurement uncertainty.

If a bad calibration is done (for any reason) or the calibration constants are missed by error, factory settings can be recovered by means of **Recover fact.** (recover factory calibration).

In addition to the previously described constants, this screen also shows the values for the last automatic-reset of pressure sensors P1 and P2, together with the instantaneous values of the two temperatures sensors and the three pressure sensors. These values are not processed and are direct readings from the A/D converter. They are displayed in **Hexadecimal**.

5.2.8.2. **Electrical Adjusting**

This is a screen for the technical service. There are some parameters to adjust and other ones that only can be displayed.

- **Screen Contrast:** the display module is sensitive to the temperature, so depending on atmospheric temperature the screen quality appearance can change. In order to correct this problem, intrinsic to this kind of display modules, the Sampler corrects the screen contrast automatically, according to standard values given by the manufacturer and the atmospheric temperature measured by the equipment. When temperature changes are very important regarding the initial adjustment values, it is possible that the contrast is not the best. This parameter allows to adjust this contrast in order to improve the display screen.

- **Filter motor power / Charger motor power:** each motor has a different electrical specifications (inside a range). These parameters allow to adjust each three motors maximum power.

- **Charger start position**: the upper position (first filter mechanical initial position) of the charger motor has an electrical adjustment instead of a mechanical one.

- **Wait READY screen:** it allows to choose if the control board has to wait or not for the signal which means that the display is ready to write on it.

From this point on, the parameters are only informative.

- **Battery voltage:** this is the battery voltage.

- **Charge voltage:** this is the battery voltage charge.

- **Voltage +12V / +5Vcr / +5**: these correspond to internal equipment internal voltages.

- **Date memory**: indicates the date memory status (it is not an exhaustive test).

- **Clock Battery**: indicates the internal clock battery status (it keeps the date and time of the Sampler).

5.2.8.3. **Messages**

The Sampler can be configured in order to send us warning messages. This messages includes:

- Headline. This is the text entered in **Situation**
- Date and time of the sending of the message
- Current filter and installed filters
- Message

There are two message levels: level 0 and level 1. When the **level 0** is configured, the Sampler only sends the message when there is some problem in the equipment; if the **level 1** is configured, the Sampler sends messages for each event.

The possible messages and its level are the following:

- Flow rate alarm	Level 0 and 1
- System Alarm	Level 0 and 1
- 20 min. Without power supply	Level 0 and 1
- Power supply ok	Level 0 and 1
- Ended Cycle	Only level 1

This menu options are:

- **Active SMS (Y/N)**: this option allows to activate or deactivate the sending of messages.

- **Warning level:** allows the selection of the level advice.

- **Telephone number:** phone where the messages are sent. 10 digits are allowed. If the telephone number has nine digits, the remaining space can be put anywhere.

- **Location:** message headline to be sent by the equipment. It is useful to identify the sender in case of having several equipments.

In order to activate this function, it is necessary to install a SIM card in the GSM module located in the rear part of the equipment. Previously and with a mobile phone it is necessary to deactivate the PIN request on the SIM card.

5.2.8.3. **Test**

This menu is useful to check different Sampler's elements. First, it is necessary to set **Maintenance** to **Yes** in order to activate the different existing options. The corresponding test is activated or deactivated pushing successively the ↵ key on the option. **The printer Test** only indicates if the system has found some problem in this equipment.

IMPORTANT NOTE: During a normal working of the equipment, the control board takes care that the movements of the motors from the filter's charge system gets synchronized. In other words, there is no security violation, so none of the motors is damaged by another one. When we are in Test, these logical protections disappear; it is the user who should take care the motors' safety.

5.2.8.4. **Cycle stop / continue**

This option and the next one are to be used by the technical service. It allows to stop and continue a cycle at any time. If these options are executed during the sampling cycle, they can cause that the cycle does not complete correctly. After using these options it is necessary an **Immediate Start-up.**

5.2.8.5. **Paper Advance**

It allows to advance the paper in the printer. It is recommended to use this function instead of pulling the paper directly.

5.2.9. **Immediate Start-up**

This option causes the sampling operation to start immediately. The following values are reset:

- Average, true and normalized flow rates
- True and normalized volumes
- Cycle time
- Time without mains power
- Motor power

NOTE: If the **Equipment Status** is **FLOW RATE Alarm**, this message will disappear, although if the problem remains, it will be displayed again after a few seconds.

5.2.10. **Deferred Start-up**

This option initiates a deferred sampling operation, just as explained in Section 5.2.5.

5.2.11. **Stop / Charge filters**

This option stops the sampling independently of its status and puts the charger system in position to remove the sampled filters and put the new ones. It keeps the following values:

- Average, true and normalized flow rates
- True and normalized volumes
- Cycle time
- Time without mains power
- Motor power

5.3. USING THE SAMPLER

The logical sequence to do a sampling cycle is the following:

- If the equipment is still working, stop it with the option **Stop / Charging filters**.

- VERY IMPORTANT: make a note and/or print the last values form the previous filter values. <u>All previous values are deleted when a new cycle starts.</u>

- Remove the previous filter holder. Each one is numbered in the filter holder by a mark in order to identify each filter. This number is the same as the printed ticket.

- Extract the filters out of the filter holder and insert the new ones.

- Insert the filter holder in the charger taking care that the number 1 is in the bottom and the last one in the top. Finally, insert the blind filter holder.

- Check the equipments' programming.

- Push Immediate or Deferred **Start-up** to start the sampling cycle.

Make sure that the configuration parameters are like the user desires the first time the Sampler is used.

- Date and time
- Start hour and day (for deferred start-up)
- Active time and Stop time (for discontinue sampling)
- Operating Flow rate
- True or normalized flow rate control
- Clock motor or motor hours
- Filter duration
- Normalization temperature
- Number of installed filters

6. FILTER HOLDER

MCV currently manufactures several filter holder models that can be employed with this Sampler. These are supplied separately from the Sampler and the following models are available:

- PST-15 filter holder: this is for 15-centimetre round diameter filters, with a useable diameter of 12 centimeters. Fiberglass or quartz fiber filters are generally used and it is not recommended for flow rates exceeding 40 m^3/h.

- CBE-CAV container: this container is for blocks of foam for dioxins and furans. It is made of PVC with an inner glass body. It is generally used with the PST-15 filter-holder.

- PM1025-CAV head: this head is for 15-centimetre diameter round filters with cut-off at 10µ or 2,5µ depending on the set of nozzles employed. It must operate at 30 m^3/h.

7. MAINTENANCE

The maintenance required to keep the Sampler in optimum conditions is minimal. Components or equipment parts, which require attention, are the following ones:

- Output tube: It is affected by atmospheric conditions. It is recommended to change it annually.

- Power box fan: It is very important to ensure good ventilation of the power electronics. The correct working of this fan must be checked periodically, simply approaching the hand to the bottom of the box, where air circulation can be noticed. It is recommended to check it every 4/6 months.

- Door lock: It is affected by climatic and environmental conditions (dust, humidity, etc.). Cleaning and oiling every 4/6 months is recommended.

- Battery: This component guarantees that the equipment won't lose its current status if there is a power cut. It is recommended to check it annually. To check battery status, be sure the equipment has been connected to mains supply at least 72 hours, and then, disconnect it and program a 48-hour cycle with clock hours and immediate start-up; the Sampler will start a cycle and the mains failure counter will start counting. When the equipment runs out of battery, connect it to mains supply and look the mains failure time in the maintenance screen. It shows how much time the Sampler has been working with batteries. More than 18 hours is considered valid. To prove that, program ***Active Screen*** time at about 10 minutes.

- Calibration: To calibrate the Sampler, follow the instructions on section 5.2.6.1.. Although it is not strictly necessary, it is recommended to calibrate it annually.

7.1. CHANGING PAPER AND RIBBON

Some red lines appear when the paper is almost finished. To change the paper roll, the two bolts holding the printer cover must be unscrewed. Then, change the finished roll for the new one. To make the change, the end of the paper is introduced in the printer aperture supply and the paper must be moved forward until it protrudes about 10 cm. Finally the cover is fixed again with the bolts.

If the printing in the paper is soft the ribbon must be changed as follows: remove the printer cover and extract the finished ribbon by its extremes. Insert the new one and tense the ribbon turning the grooved disc in the direction shown by the arrow.

8. TECHNICAL INFORMATION

8.1. PROTECTIONS AND FUSES

The Sampler includes some protections against motor short-circuit and over-voltage conditions produced in the mains power system. The fist line of protection, which completely removes all 230 Vac electric power (phase and neutral) to the Sampler is the 6-amp input circuit breaker. Next, on the power board, there are two 5-amp, 5 x 20-mm fuses, one for each phase, followed by a mains filter and a varistor (MOV). The whole circuit guarantees a well-protected power supply for the low voltage transformer. In case of low energy spikes, this set of components will absorb them and if they contain higher energy levels, the 6-amp fuses will blow and/or the circuit breaker will trip. For the electronics, there is also a 1-amp, 5 x 20-mm fuse, which will blow in the case of problems and remove the 12 Vdc supply.

When necessary, it is recommended to replace the fuses by other identical ones.

8.2. CONTROL BOARD / POWER BOARD

The control board installed in this Sampler includes a modern microprocessor, which manages the entire operation of the Sampler. The board also includes a real-time clock integrated circuit, which replaces external mechanical components, such as timing devices. To prevent the battery form completely discharging, the board includes a battery voltage detector, which will disconnect all consumption if the battery voltage falls below approximately 10.5V. When this happens, the battery recharging circuit is capable of powering the electronics board and recharging the battery. The board also includes an EEPROM (non-volatile memory) in which the Sampler stores all calibration data. Cycle programming data and current cycle values are stored in non-volatile RAM on the real-time clock chip. The fluorescent light is controlled by means of a solid-state relay, and operates in conjunction with the display lighting, with the difference that during a mains power failure, the display will illuminate, but not the fluorescent light.

8.3. DISPLAY BOARD

This board includes the display module, the keys used for Sampler control and the high-voltage converter for display backlighting.

8.4. CONNECTORS

A description of the electrical signals for each of the Sampler's connectors is given below.

8.4.1. 230 Vac power supply connector

This is a circular connector for exterior use. The pin numbering is given in the following table:

Pin	Colour	Description
1	Yellow / green	Ground
2	Blue	230Vac neutral
3	Black	230Vac phase

8.4.2. Power board connectors

8.4.2.1. Power board connector J1. Side Motor

This is a 6-way terminal strip connector, with numbering beginning at the right.

Pin	Color	Description
1	Brown	Motor-1
2	Red	Common F.C. right
3	Orange	Contact n.o. F.C. right
4	Yellow	Contact n.o. F.C. left
5	Green	Common F.C. left
6	Blue	Motor-2

8.4.2.2. Power board connector J2. Filter motor

This is a 6-way terminal strip connector, with numbering beginning at the right.

Pin	Colour	Description
1	Brown	Motor-1
2	Red	Common F.C. upper
3	Orange	Contact n.o. F.C upper
4	Yellow	Contact n.o. F.C. lower
5	Green	Common F.C. lower
6	Blue	Motor-2

8.4.2.3. Power board connector J3. Loading motor

This is a 7-way terminal strip connector, with numbering beginning at the right.

Pin	Colour	Description
1	Orange	Pole 1 phase 1
2	White	Power point intermediate phase 1
3	Blue	Pole 2 phase 1
4		
5	Red	Pole 2 phase 2
6	Black	Power point intermediate phase 2
7	Yellow	Pole 1 phase 2

8.4.2.4. Power board connector J4. Position detectors

This is a 4-way terminal strip connector, with numbering beginning at the right.

Pin	Colour	Description
1	Blue	Ground
2	Black	Lower detector signal
3	Black	Upper detector signal
4	Brown	+12V

8.4.2.5. Power board connector J5. Outer converter

This is a 6-way terminal strip connector with numbering beginning at the right.

Pin	Colour	Description
1	Blue	230Vac (1)
2	Blue	230Vac (2)
3	Red	Converter exit 1a
4	Yellow	Converter exit 1b
5	White	Converter exit 2a
6	Black	Converter exit 2b

8.4.2.6. Power board connector J6. 230Vac input

This is a 3-way terminal strip connector, with numbering beginning at the right.

Pin	Colour	Description
1	Blue (1,5mm)	230Vac neutral
2	Yellow / green (1,5mm)	Ground
3	Black (1,5mm)	230Vac phase

8.4.2.7. Power board connector J7. Exterior Control (optional)

This is a 2-way terminal strip connector, with numbering beginning at the right.

Pin	Color	Description
1		Phase-1
2		Phase-2

8.4.2.8. Power board connector J8. Motor

This is a 5-way terminal strip connector, with numbering beginning at the right.

Pin	Colour	Description
1	Black (1,5mm)	230 Vac
2	Yellow / Green (1,5mm)	Ground
3	Blue (1,5mm)	230 Vac
4	Blue	Motor control signal (Ground)
5	Red	Motor control signal

8.4.2.9. Power board connector J9. Fluorescent light

This is a 2-way terminal strip connector, with numbering beginning at the right.

Pin	Colour	Description
1	White (0,5mm)	Fluorescent light-1
2	White (0,5mm)	Fluorescent light-2

8.4.2.10. Power board connector J10. Switch / Battery

This is a 4-way terminal strip connector, with numbering beginning at the right.

Pin	Colour	Description
1	Red (0,5mm)	Battery (+)
2	Black (0,5mm)	Battery (-)
3	White (0,5mm)	Switch-2
4	White (0,5mm)	Switch-1

8.4.2.11. Power board connector JP1. Power board and Control Interface

This is a 40-way ribbon connector.

Pin	Description
1	GND
2	GND
3	GND
4	GND
5	Bat
6	GND
7	TP1
8	GND
9	+12V
10	+12V
11	+12V
12	5Vcr
13	5Vcr
14	5Vcr
15	5Vcr
16	GND
17	SRED
18	GND
19	Motor
20	GND
21	CP-F
22	Pet. Mot.
23	FC-L
24	Control F
25	FC-U
26	FC-D
27	CP-L
28	FC-R
29	ML-EN
30	CCW
31	CP-C
32	MF-EN
33	SWP
34	GND

35	CK
36	CW
37	R297
38	H/F
39	Det-S
40	Det-I

8.4.3. Control Board connectors

8.4.3.1. Control board connector JP1. Printing module

This is a 20-way ribbon connector.

Pin	**Description**
1	D0
2	D1
3	D2
4	D3
5	D4
6	D5
7	D6
8	D7
9	STR
10	BUSY
11	GND
12	GND
13	/RES
14	NC
15	5Vcr
16	5Vcr
17	GND
18	GND
19	GND
20	GND

8.4.3.2. Control board connector JP2. Keypad / Display Module

This is a 26-way ribbon connector.

Pin	Description
1	GND
2	Contrast control
3	+12V
4	+12V
5	GND
6	GND
7	+5V
8	+5V
9	Key 4
10	Key 3
11	Key 2
12	Key 1
13	Illumination control
14	/WR
15	/RD
16	COMANDO
17	Reset
18	CS LCD
19	Data 7
20	Data 6
21	Data 5
22	Data 4
23	Data 3
24	Data 2
25	Data 1
26	Data 0

8.4.3.3. Control board connector JP3. Board interconection

This is a 40-way terminal strip connector. See connector JP1 from the power board.

8.4.3.4. Control board connector JT1 and JT2. Temperature sensors

These are two-way connectors for the temperature sensors. JT1 is the connector carrying the auxiliary temperature sensor (internal) and JT2 is for the sampling sensor temperature (suction tube). The temperature sensors do not have polarity because they are PTC resistances.

8.4.3.5. JRS Connector. Serial communications.

This is the RS-232C series communications connector. Numbering begins at the left.

Pin	Description
1	+5V RS isolated
2	GND RS
3	-5V RS isolated
4	TxD
5	RxD

NOTE: These signals are not protected.

8.5. SPARE PARTS

A list of the more common spare parts is provided below:

MCV Reference	Description
1403 0001	Sampler gas exhaust pipe (3 meters)
2151 0004	Transport handle
3512 1260	Battery 12V, 1.3Ah
3133 0000	Switch
3529 0002	Mains cable, 230Vac, (3 meters)
5411 1381	Control Board
5411 1372	Power Board
5411 1390	Display / keypad board

9 DRAWINGS

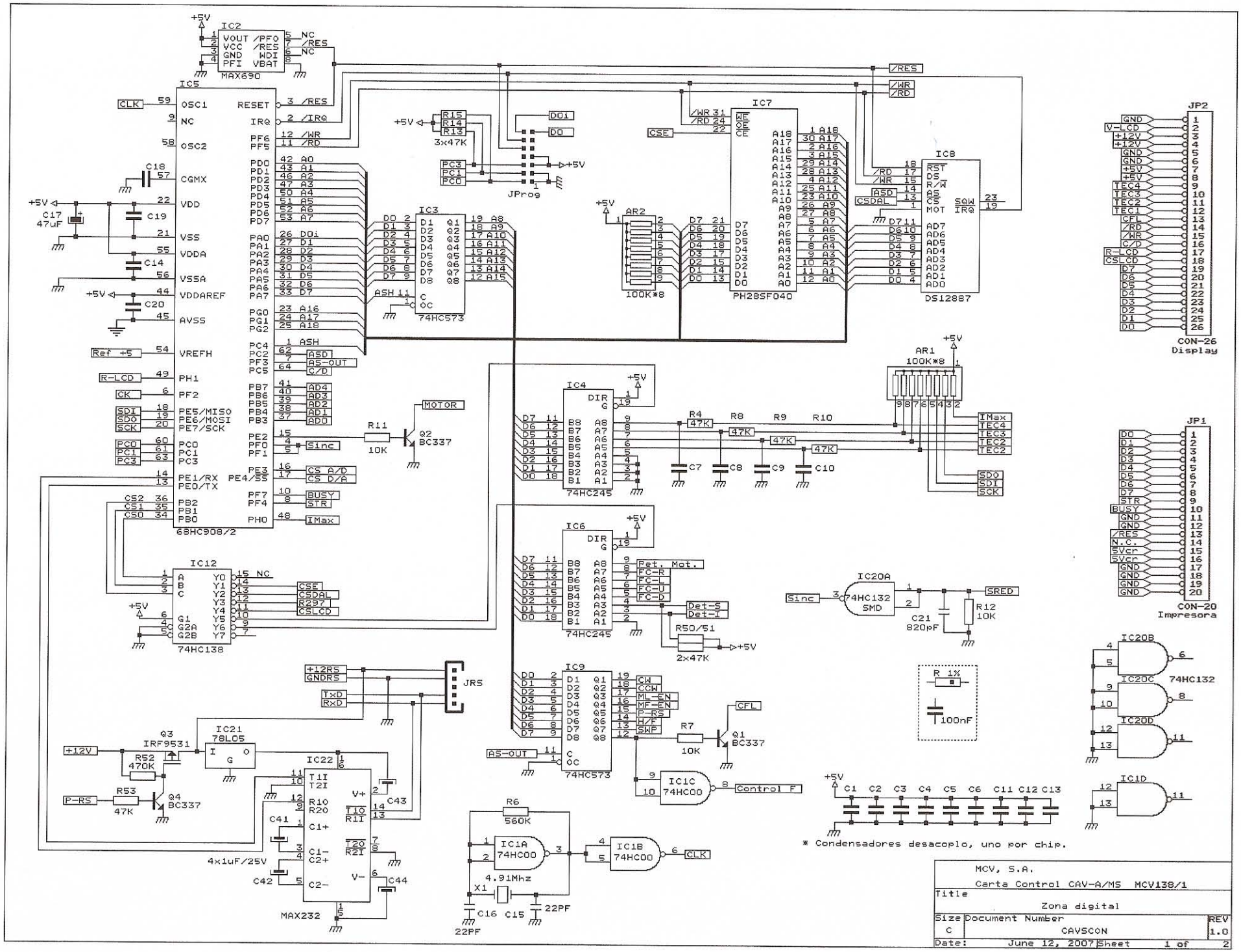
IC2
MAX690
IC5
68HC908/2
IC3
74HC573
IC7
PH28SF040
IC8
DS12887
JP2
CON-26
Display
IC4
74HC245
IC6
74HC245
IC9
74HC573
IC12
74HC138
IC20A
74HC132
SMD
JP1
CON-20
Impresora
IC20B
IC20C
IC20D
74HC132
IC1D
IC21
78L05
IC22
MAX232
JR5
IC1A
74HC00
IC1B
74HC00
IC1C
74HC00
Q1
BC337
Q2
BC337
Q3
IRF9531
Q4
BC337
JProg
AR1
100K*8
AR2
100K*8
* Condensadores desacoplo, uno por chip.
MCV, S.A.
Carta Control CAV-A/MS MCV138/1
Title
Zona digital
Size C
Document Number
CAVSCON
REV 1.0
Date: June 12, 2007
Sheet 1 of 2

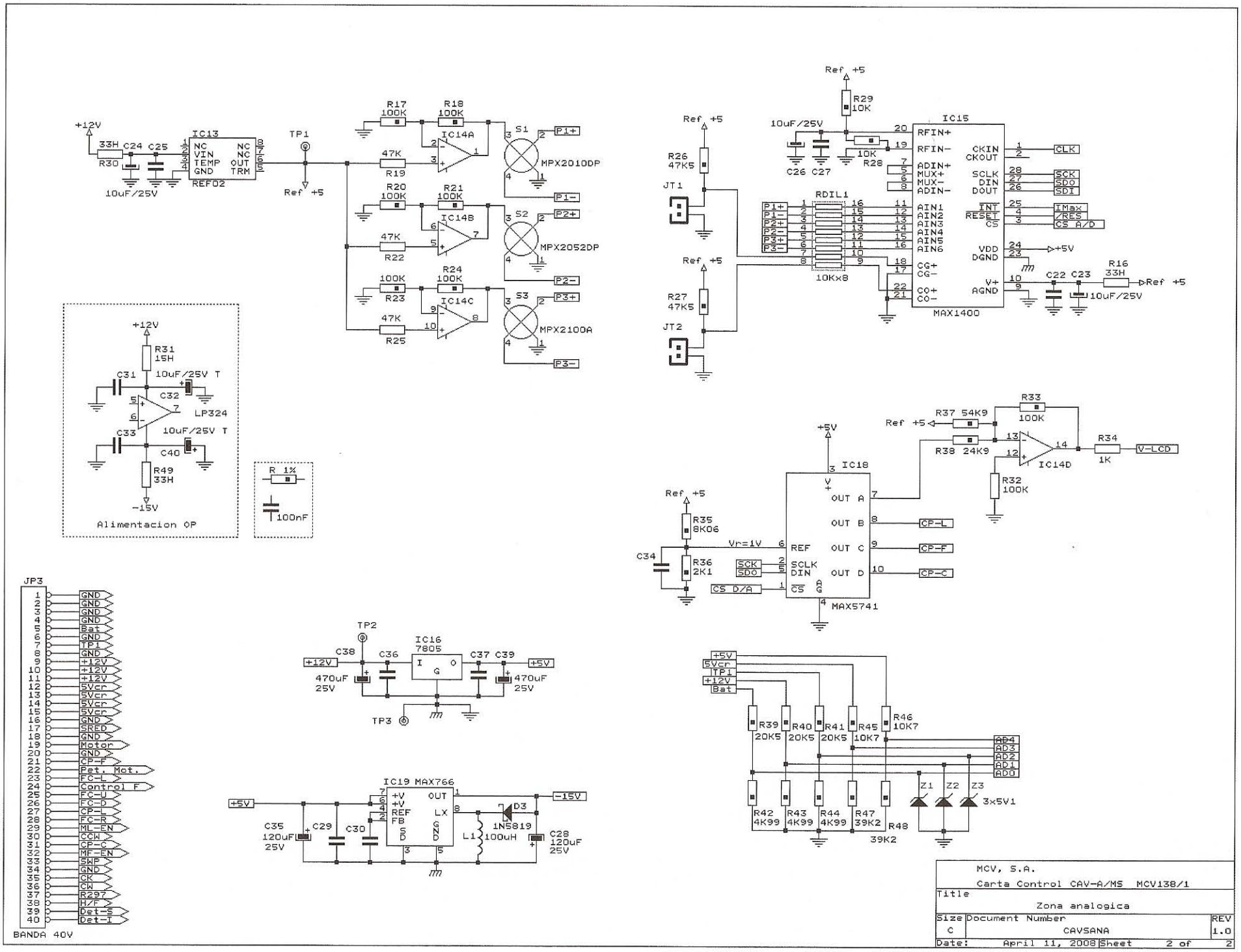

MCV, S.A.

Carta Control CAV-A/MS MCV138/1

Title: Zona analogica

Size: C | Document Number: CAVSANA | REV: 1.0

Date: April 11, 2008 | Sheet 2 of 2

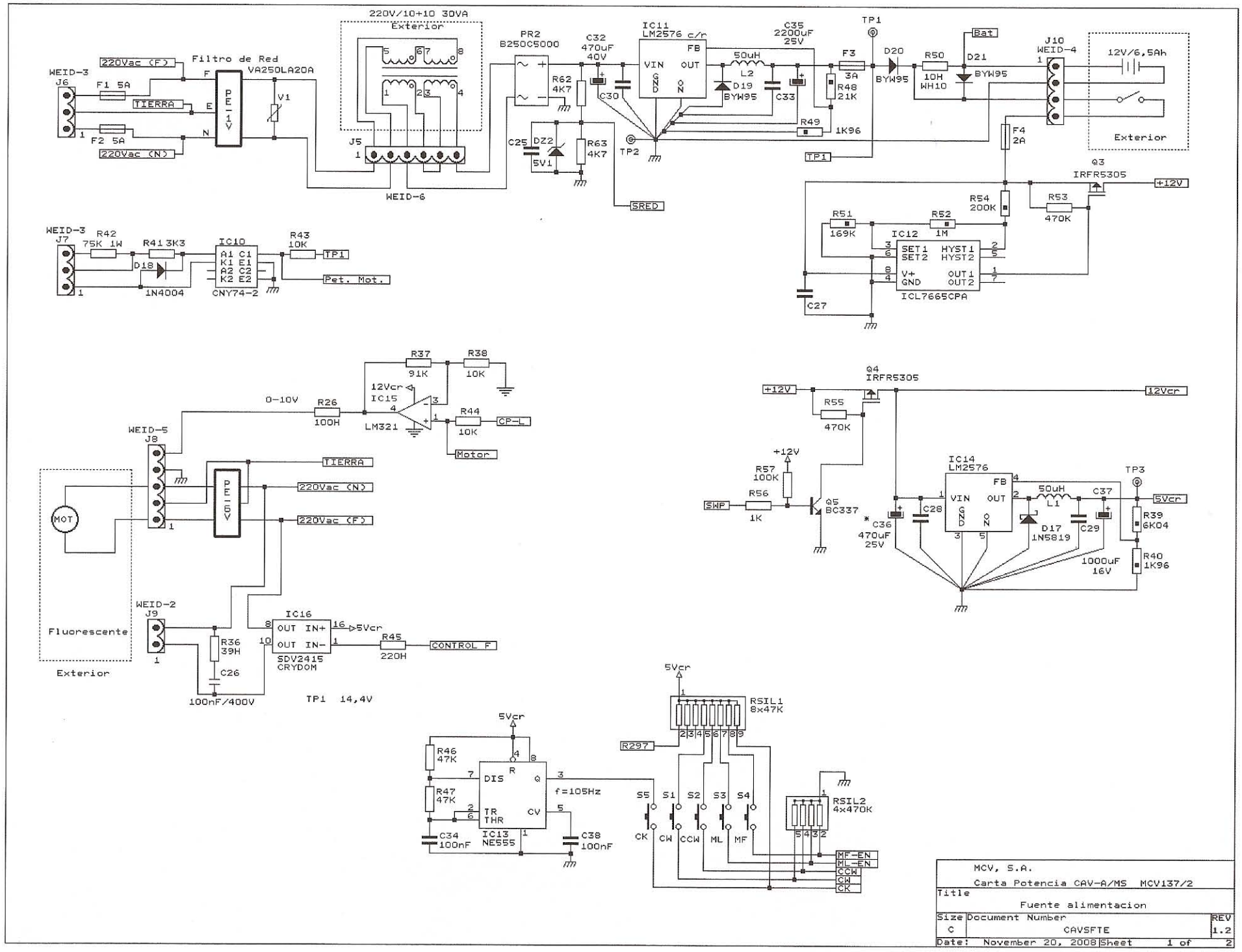

MCV, S.A.		
Carta Potencia CAV-A/MS MCV137/2		
Title		
Fuente alimentacion		
Size C	Document Number CAVSFTE	REV 1.2
Date: November 20, 2008	Sheet 1 of 2	

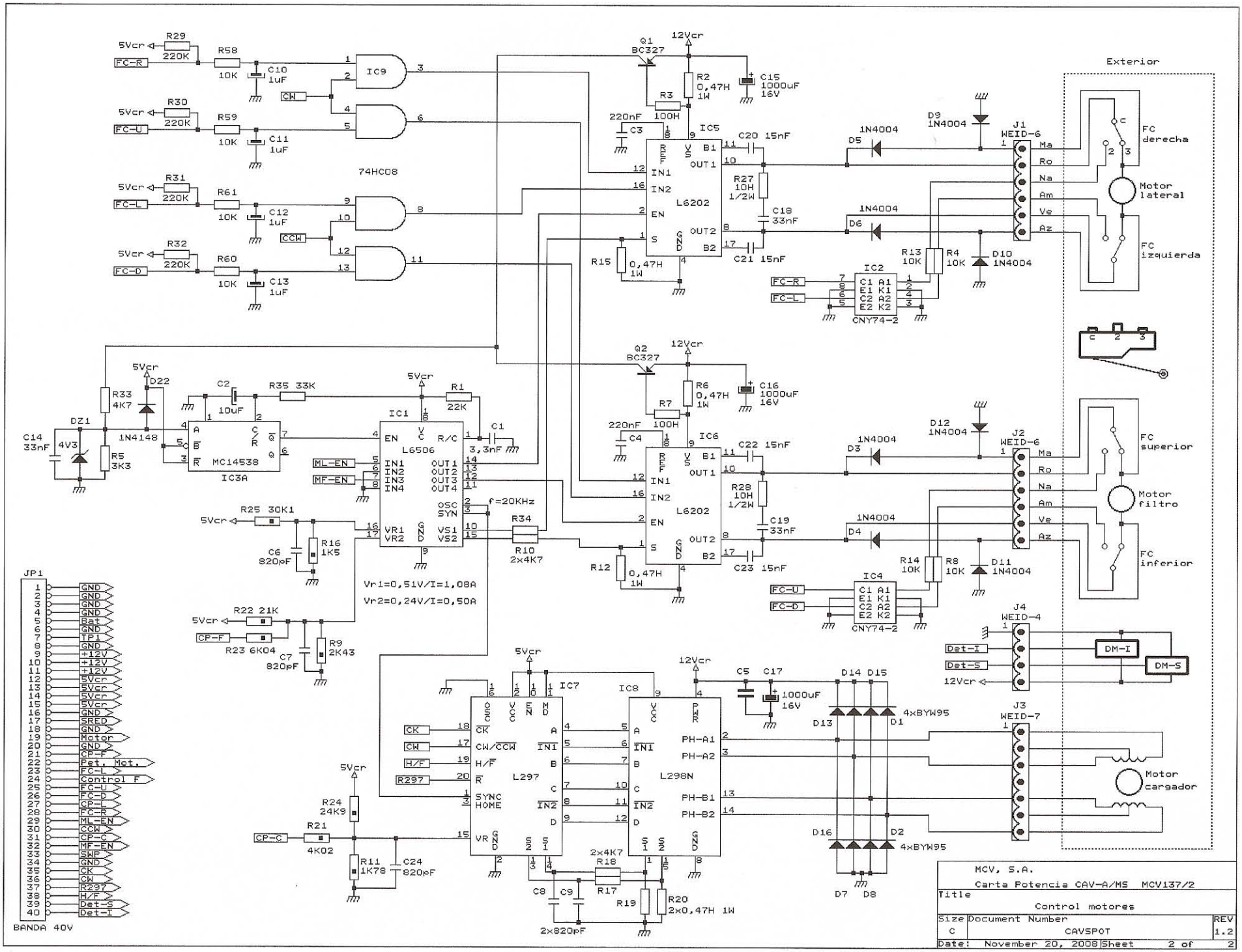
74HC08
IC9
L6202
IC5
IC6
L6506
IC1
MC14538
IC3A
CNY74-2
IC2
IC4
L297
IC7
L298N
IC8
Exterior
FC derecha
Motor lateral
FC izquierda
FC superior
Motor filtro
FC inferior
Motor cargador
DM-I
DM-S
J1 WEID-6
J2 WEID-6
J3 WEID-7
J4 WEID-4
JP1
BANDA 40V
Vr1=0,51V/I=1,08A
Vr2=0,24V/I=0,50A
f=20KHz
4xBYW95
MCV, S.A.
Carta Potencia CAV-A/MS MCV137/2
Title
Control motores
Size C
Document Number CAVSPOT
REV 1.2
Date: November 20, 2008
Sheet 2 of 2

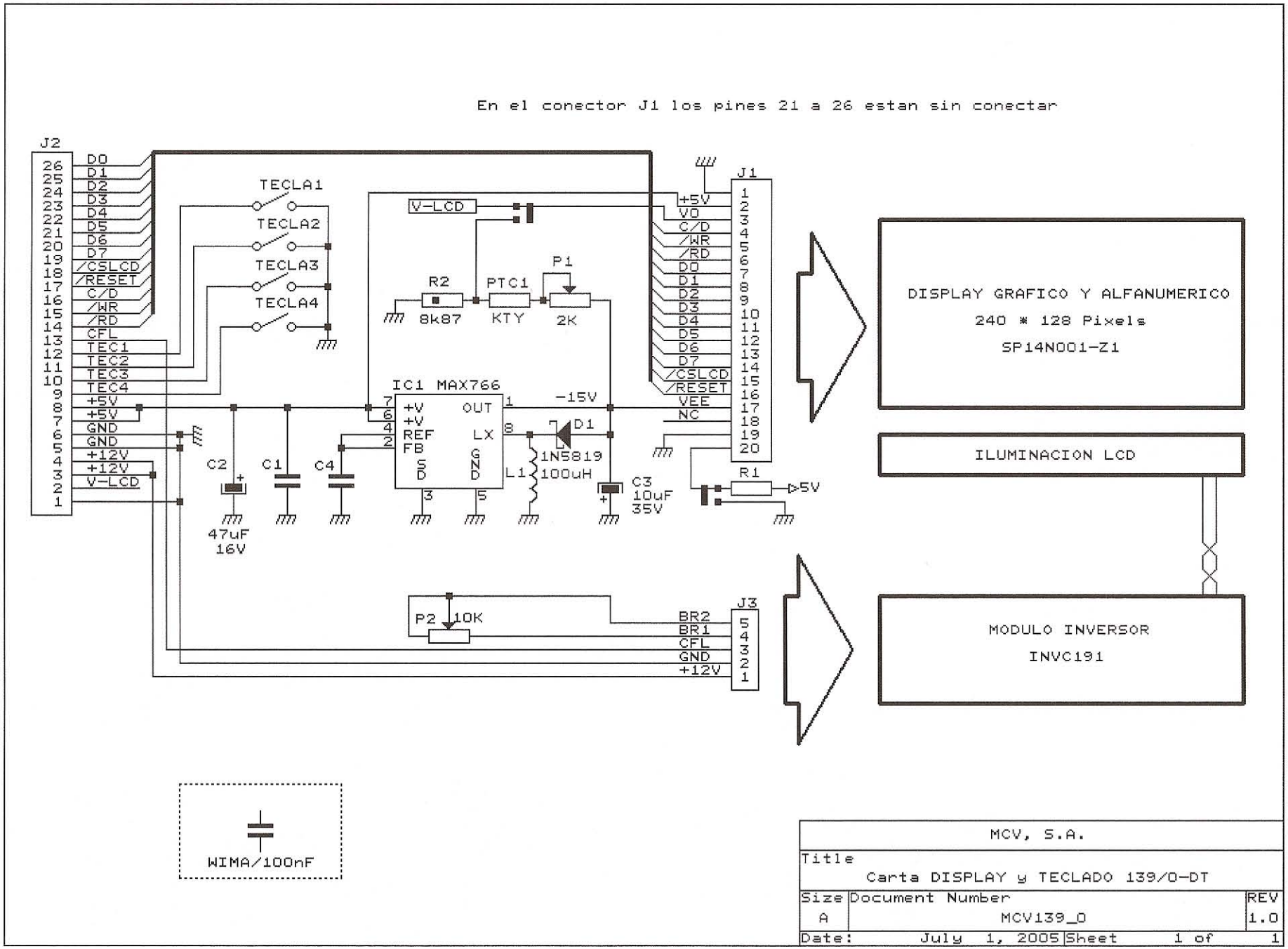
En el conector J1 los pines 21 a 26 estan sin conectar
J2
D0
D1
D2
D3
D4
D5
D6
D7
/CSLCD
/RESET
C/D
/WR
/RD
CFL
TEC1
TEC2
TEC3
TEC4
+5V
+5V
GND
GND
+12V
+12V
V-LCD
TECLA1
TECLA2
TECLA3
TECLA4
V-LCD
R2
8k87
PTC1
KTY
P1
2K
IC1 MAX766
+V
+V
REF
FB
SD
OUT
LX
GND
-15V
D1
1N5819
L1
100uH
C2
47uF
16V
C1
C4
C3
10uF
35V
J1
+5V
VO
C/D
/WR
/RD
D0
D1
D2
D3
D4
D5
D6
D7
/CSLCD
/RESET
VEE
NC
R1
5V
DISPLAY GRAFICO Y ALFANUMERICO
240 * 128 Pixels
SP14N001-Z1
ILUMINACION LCD
P2
10K
J3
BR2
BR1
CFL
GND
+12V
MODULO INVERSOR
INVC191
WIMA/100nF
MCV, S.A.
Title
Carta DISPLAY y TECLADO 139/0-DT
Size
A
Document Number
MCV139_0
REV
1.0
Date: July 1, 2005
Sheet 1 of 1